Top Panel Brush Strip Plate

Cheval
ISO 9001 & ISO 14001 Certified

Product Information

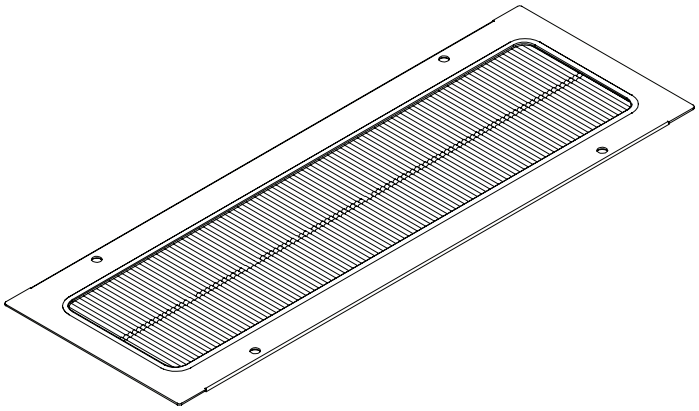

- Top panel brush strip plates are used for convenient cable entry through the top of the rack.
- Allows cables to pass, but blocks air and contaminants

Features

- Easy to install to the top panels (roofs).
- High grade cold rolled steel.
- Tough scratch resistant powder coat finish.

Dimensions*

Front

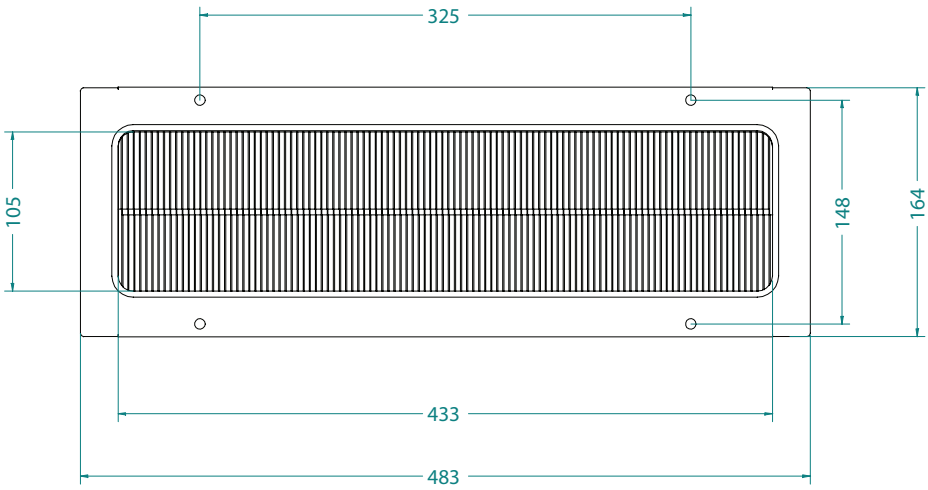

Top

Side

Part Number	Part Name
PLTPRSBLK	Top Panel Brush Strip Black

*Dimensions are in millimeter

Cheval Group of Companies
Head Office : Email : Commce@chevalgrp.com Tel : +66 2315 1504-5 Fax : +66 2315 1506
Thailand Domestic Sales Office : domestic_sales@chevalgrp.com Tel : +66 2744 1632 Fax : +66 2399 1783
www.chevalgrp.com

Top Panel Brush Strip Plate

Cheval
ISO 9001 & ISO 14001 Certified

Product Information

Application and Installation :

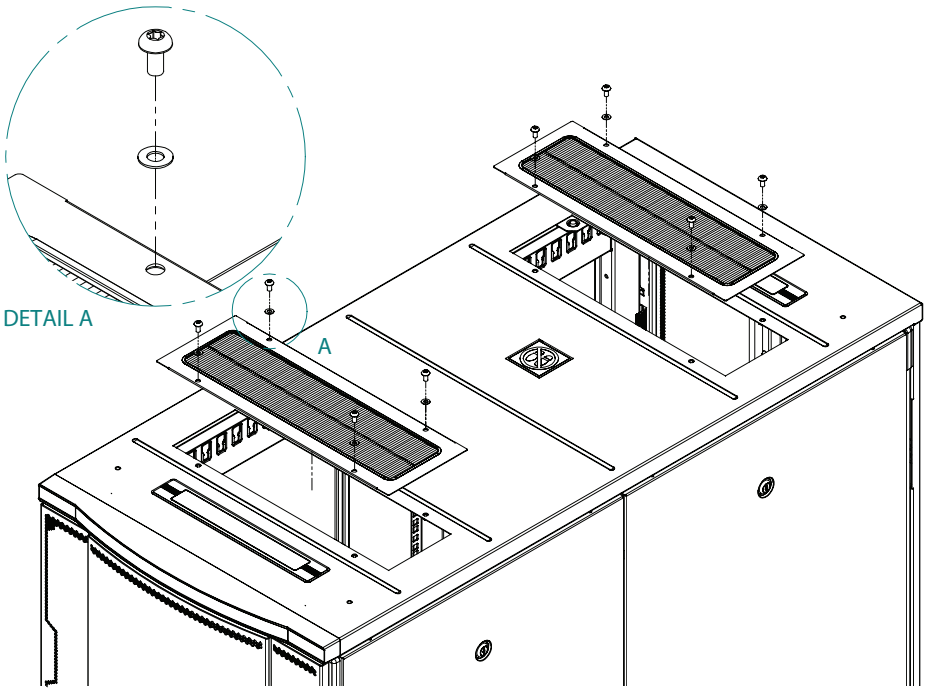

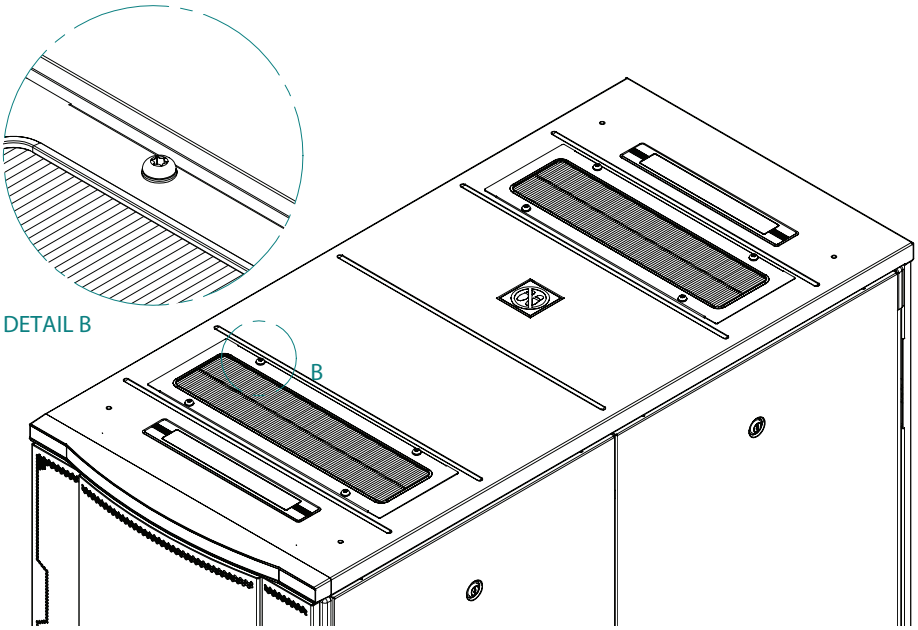

Contents of KIT

Item	Part Name	Qty
1	Assembly Top Panel Brush Strip	1
2	Screw M6x12 PAN T30	4
3	Flat Washer M6	4

Cheval Group of Companies
Head Office : Email : Commce@chevalgrp.com Tel : +66 2315 1504-5 Fax : +66 2315 1506
Thailand Domestic Sales Office : domestic_sales@chevalgrp.com Tel : +66 2744 1632 Fax : +66 2399 1783
www.chevalgrp.com